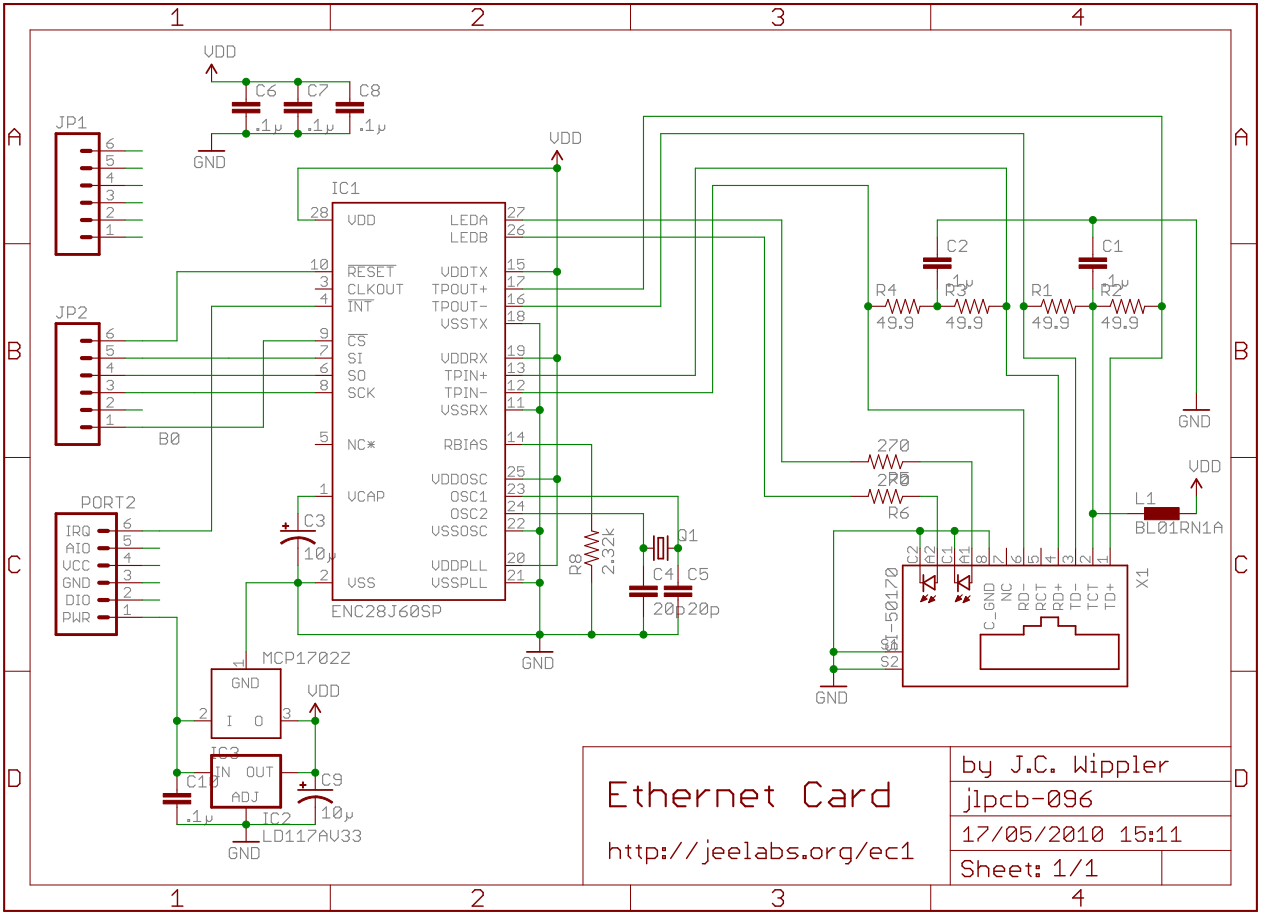

Ethernet Card

http://jeelabs.org/ec1

by J.C. Wippler

jlpcb-096

17/05/2010 15:11

Sheet: 1/1